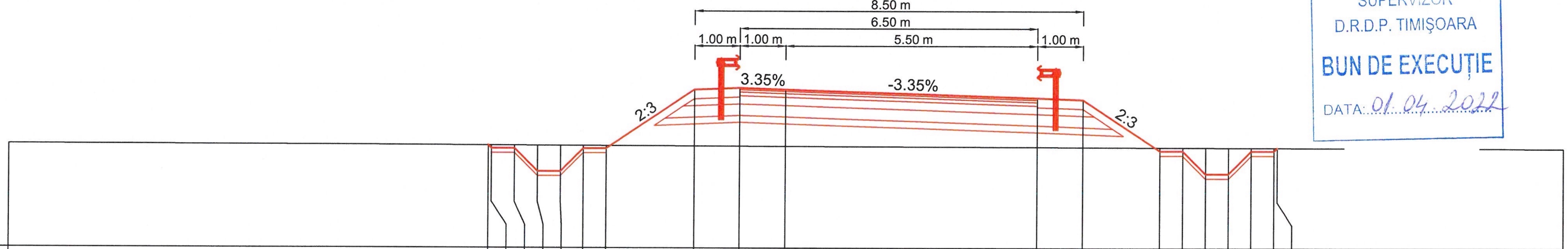

R.L. = 93.00

COTE PROIECT		95.24	95.16	95.16	94.66	94.66	95.16	95.16	96.45	96.49	96.46	96.27	96.23	95.12	95.12	94.62	94.62	95.12	95.12	95.19	
COTE TEREN	95.25	95.24	95.23	95.23	95.23	95.23	95.23	95.23	95.22	95.22	95.22	95.20	95.20	95.20	95.20	95.20	95.19	95.19	95.19	95.19	95.18
DISTANTE	-17.00	-6.50	-6.43	-5.93	-5.43	-4.93	-4.43	-3.93	-2.00	-1.00	0.00	5.50	6.50	8.17	8.67	9.17	9.67	10.17	10.67	10.74	17.00

KM = 140.00

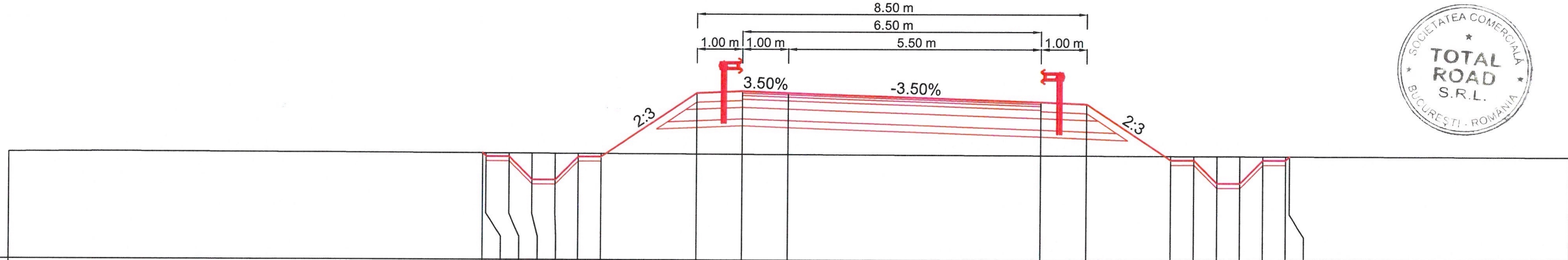

R.L. = 93.00

COTE PROIECT		95.31	95.23	95.23	94.73	94.73	95.23	95.23	96.61	96.65	96.62	96.42	96.38	95.17	95.17	94.67	94.67	95.17	95.17	95.26	
COTE TEREN	95.32	95.31	95.31	95.30	95.30	95.30	95.30	95.30	95.29	95.29	95.29	95.27	95.27	95.26	95.26	95.26	95.26	95.26	95.26	95.26	95.24
DISTANTE	-17.00	-6.65	-6.58	-6.08	-5.58	-5.08	-4.58	-4.08	-2.00	-1.00	0.00	5.50	6.50	8.32	8.82	9.32	9.82	10.32	10.82	10.91	17.00

KM = 120.00

SUPERVIZOR
D.R.D.P. TIMIŞOARA
BUN DE EXECUȚIE
DATA: 01.04.2022

SOCIETATEA COMERCIALĂ ★ TOTAL ROAD S.R.L. ★ BUCUREȘTI - ROMÂNIA

POPESCU A ... VERIFICAT ... PROIECTE

BENEFICIAR:
COMPANIA NATIONALA DE ADMINISTRAREA INFRASTRUCTURII RUTIERE S.A. (C.N.A.I.R. S.A.)

ANTREPRENOR:
TODINI CONSTRUZIONI GENERALI S.p.A.

TITLU PROIECT
PROIECTARE SI EXECUȚIE „DRUM DE LEGĂTURĂ AUTOSTRADA A1 ARAD - TIMIȘOARA - DN 69"

FAZA PROIECT: PROIECT TEHNIC DE EXECUTIE (P.T.E.)
CONTRACT NR.: 92/7703/01.02.2021
PROIECT NR.: 08/2021

SPECIFICATIE	NUME	SEMNATURA
DESENAT	Teh. Sorin VASILACHE	
PROIECTAT	Ing. Mihai COROIAN	
SEF PROIECT	Ing. Catalin GRUIANU	
VERIFICAT	Ing. Adrian NISTOR	

DATA: Martie 2022
MĂRIMEA: A3
SCARĂ: 1:100

TITLU PLANSA:
LUCRARI DE INFRASTRUCTURA RUTIERA
PROFILURI TRANSVERSALE CURENTE
NOD DC58 - BRETEA 4

NUMAR PLANSA: PTC - 459
PICHET: -

Revizie

NR.	DATA	DESCRIERE
0	08.2021	Emitere P.T.E.
1	09.2021	Conf. nr.290/DLA1-224
2	02.2022	Conf. ASR 92/93833